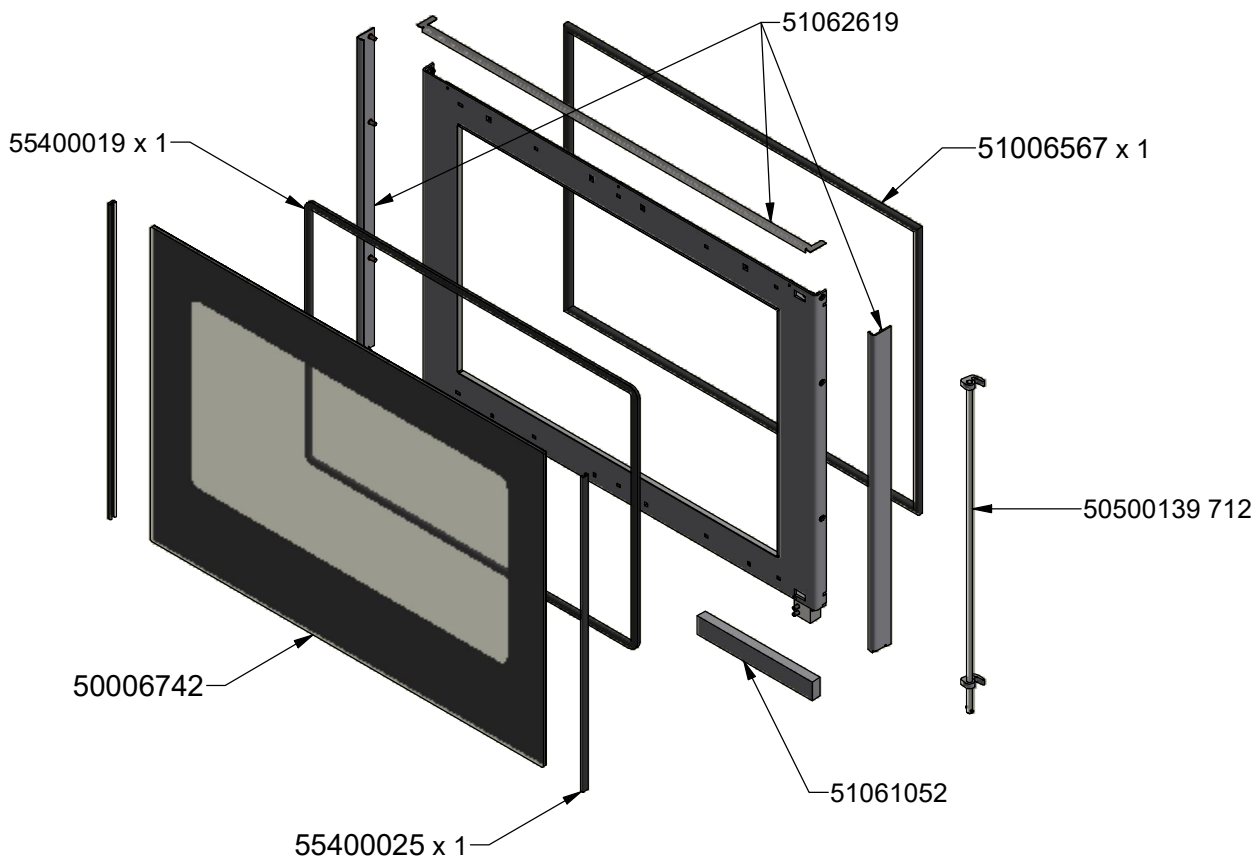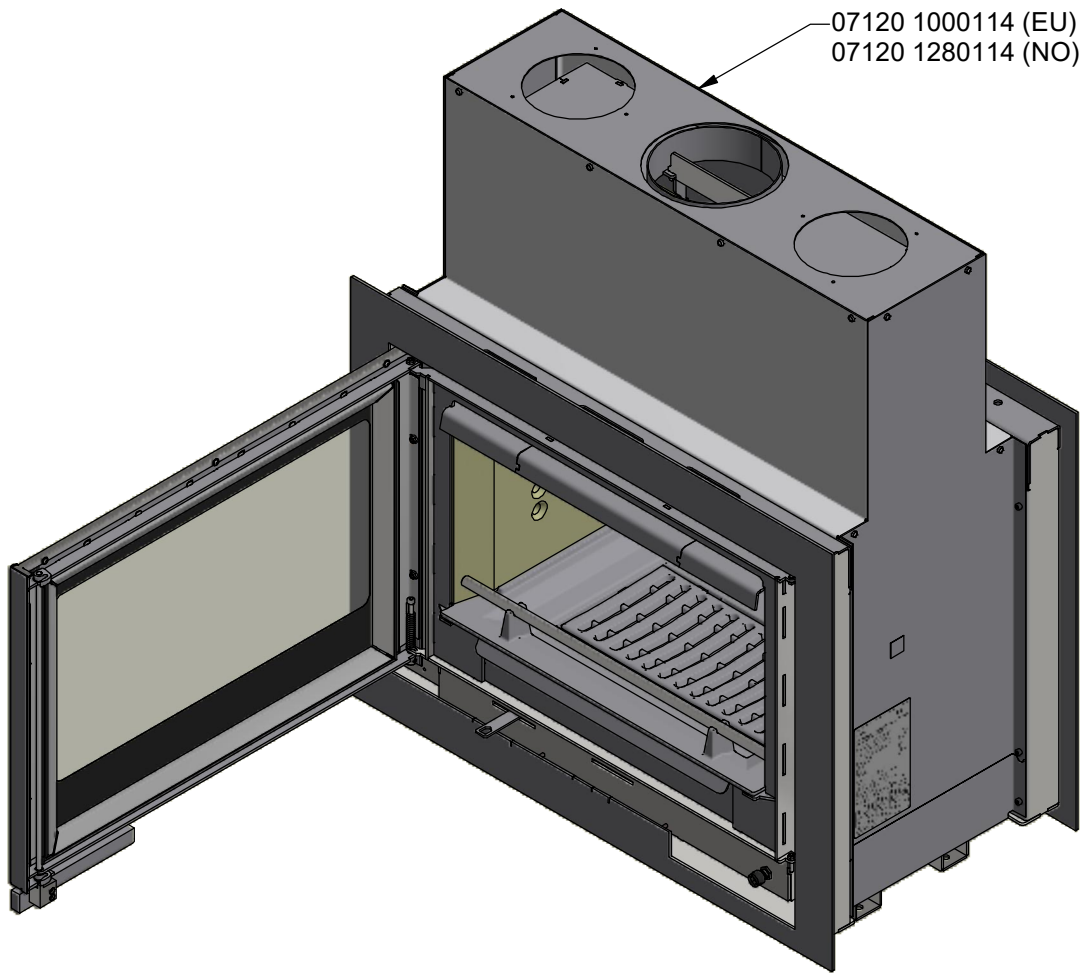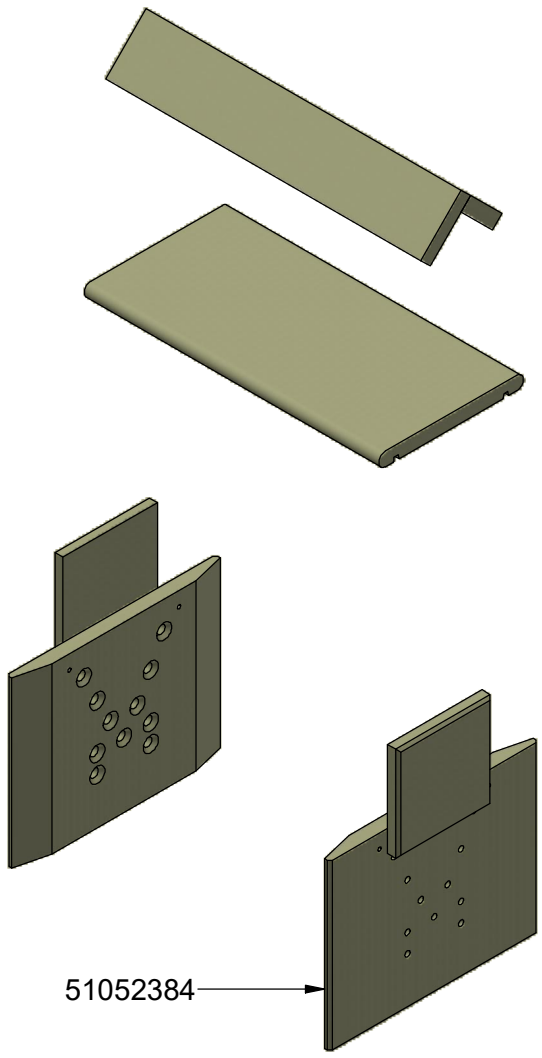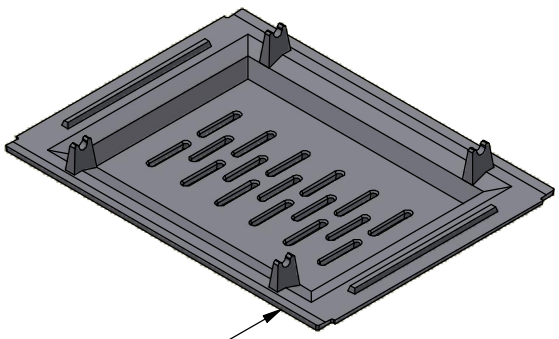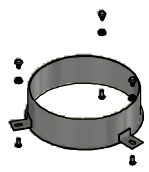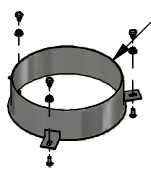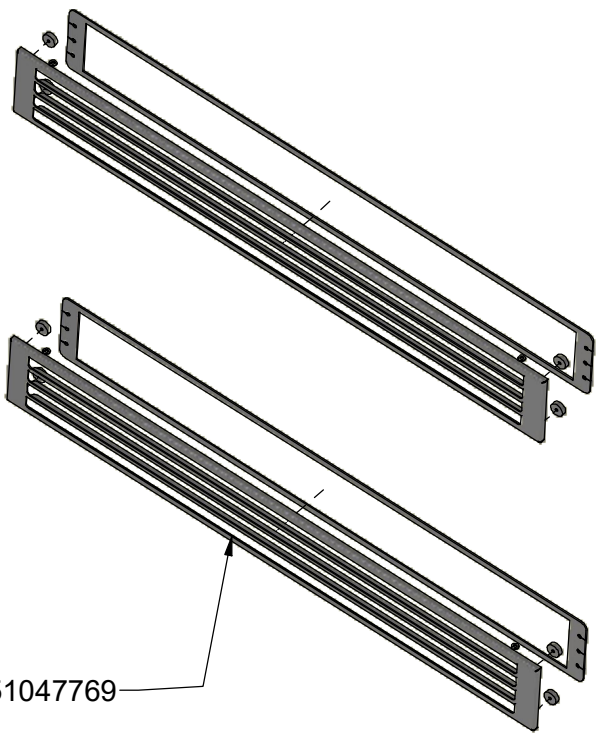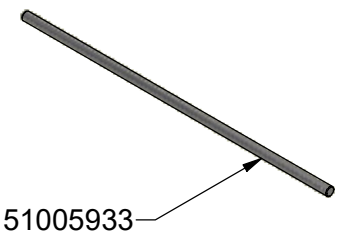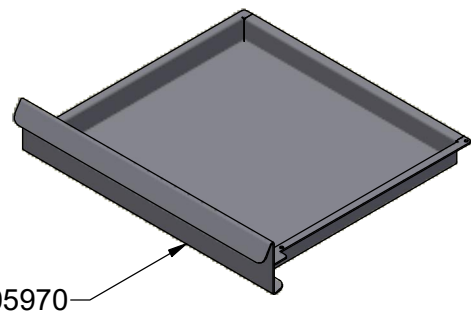56712010 012 (Door complete)